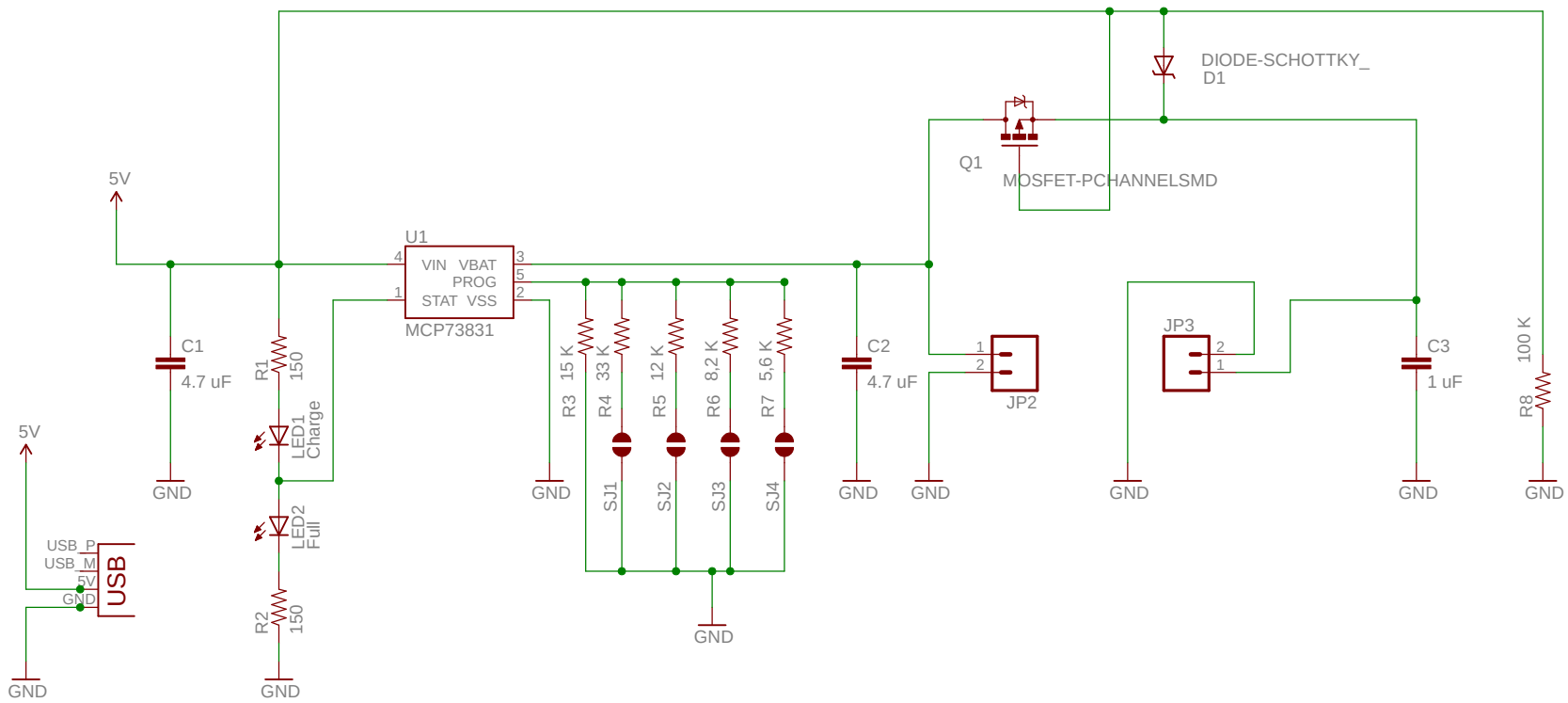

13/03/2014 09:54:43 C:\Users\proprietaire\Documents\eagle\New_Project_2\lipochargeur4.sch (Sheet: 1/1)