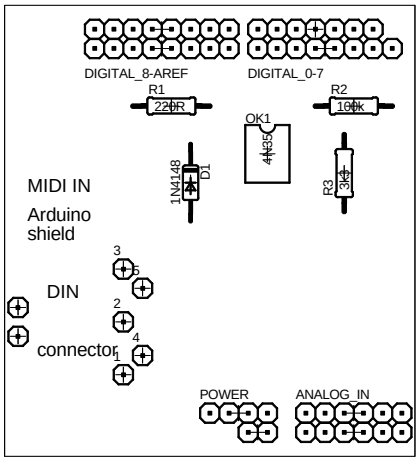
DIGITAL_8-AREF
DIGITAL_0-7
R1
220R
R2
100k
OK1
4N35
1N4148
D1
R3
3k3
MIDI IN
Arduino
shield
3
5
DIN
2
4
1
connector
POWER
ANALOG_IN