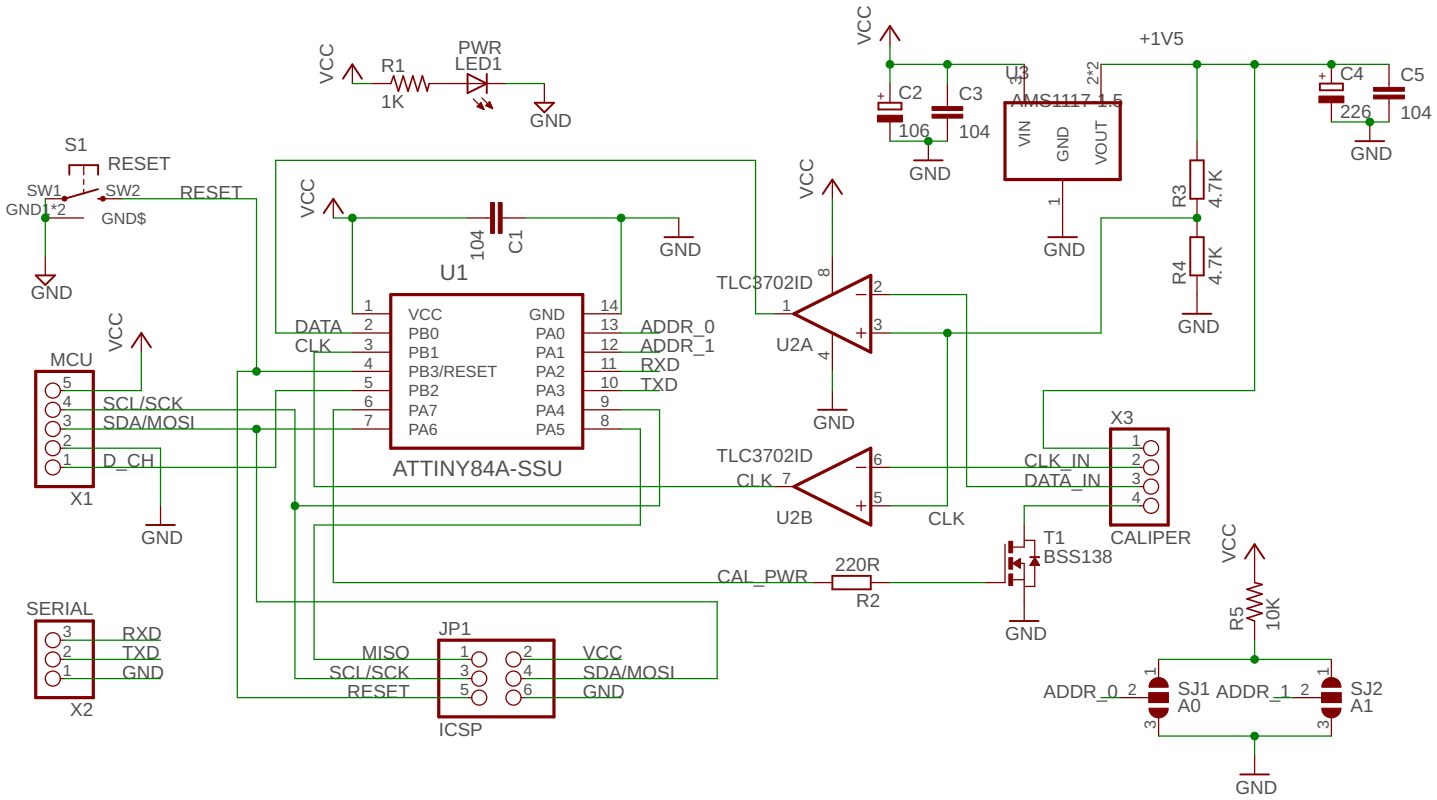
VCC
R1
1K
PWR
LED1
GND
S1
RESET
SW1
SW2
GND1*2
GND$
RESET
GND
VCC
104
C1
GND
U1
VCC
PB0
PB1
PB3/RESET
PB2
PA7
PA6
GND
PA0
PA1
PA2
PA3
PA4
PA5
DATA
CLK
ADDR_0
ADDR_1
RXD
TXD
ATTINY84A-SSU
MCU
VCC
SCL/SCK
SDA/MOSI
D_CH
X1
GND
SERIAL
RXD
TXD
GND
X2
JP1
MISO
SCL/SCK
RESET
VCC
SDA/MOSI
GND
ICSP
VCC
TLC3702ID
U2A
GND
TLC3702ID
CLK
U2B
CLK
CAL_PWR
220R
R2
VCC
C2
106
C3
104
GND
U3
AMS1117-1.5
VIN
GND
VOUT
GND
+1V5
R3
4.7K
R4
4.7K
GND
C4
226
C5
104
GND
X3
CLK_IN
DATA_IN
CALIPER
T1
BSS138
GND
VCC
R5
10K
ADDR_0
SJ1
A0
ADDR_1
SJ2
A1
GND