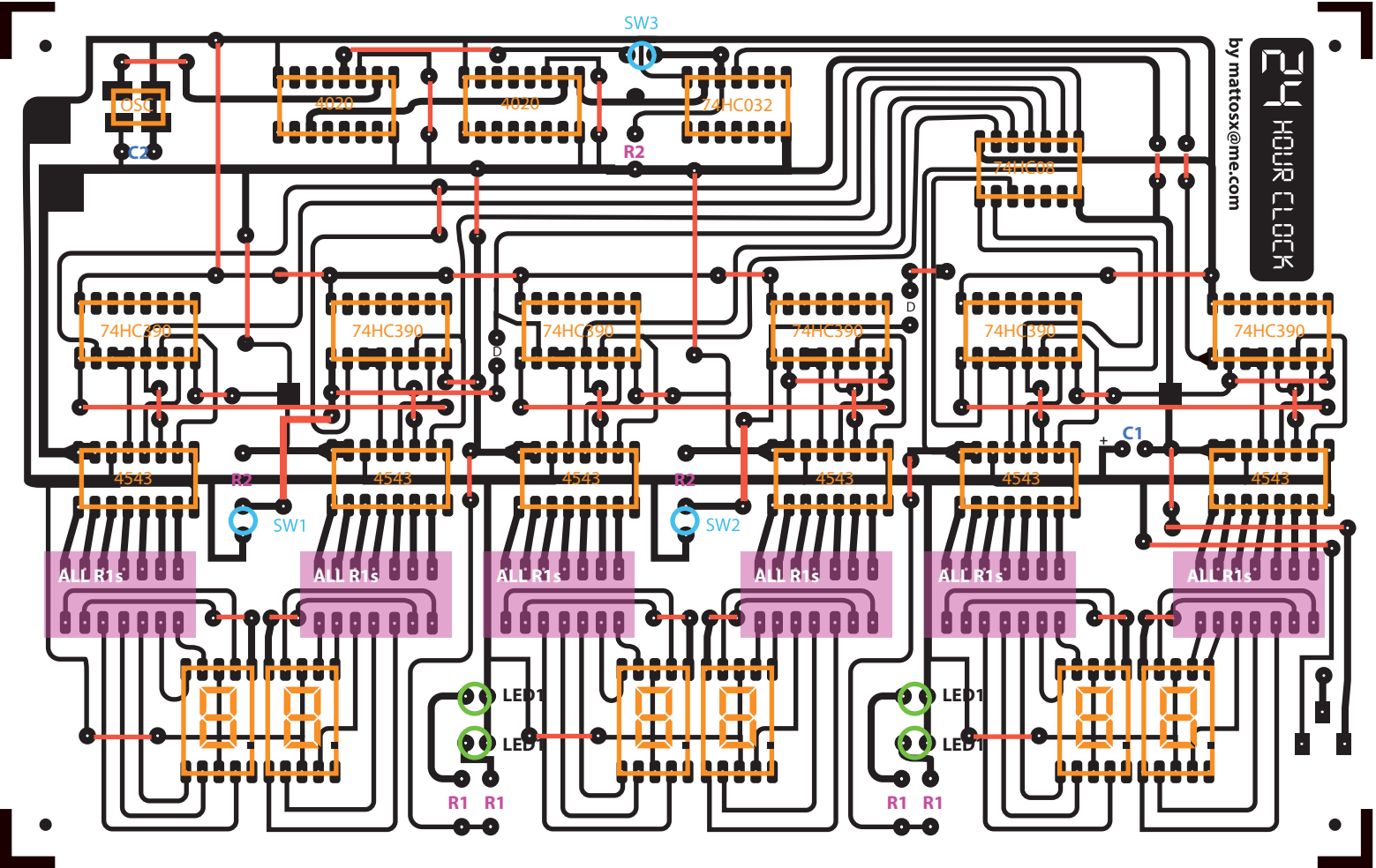

(6) 74HC390 Dual Decade Counters
(6) 4543 BCD to Decimal Converters
(2) 4020 Divide by 16384 Counter
(1) 74HC32 Quad OR Gate
(1) 74HC08 Quad AND Gate
(39) 500Ω or 1000Ω Resistors [R1]
(2) Diodes [D1]
(3) 10kΩ Resistors [R2]
(6) Common Anode 7-Segment Displays
(4) 3 mm Green LEDs
(1) 100 uF Capacitor [C1]
(1) 0.1 uF Capacitor across Crystal Oscillator [C2]
(1) CMOS 32.768 KHz Crystal Oscillator
(3) Momentary Switches [SW]
(4) 3mm Green LEDs