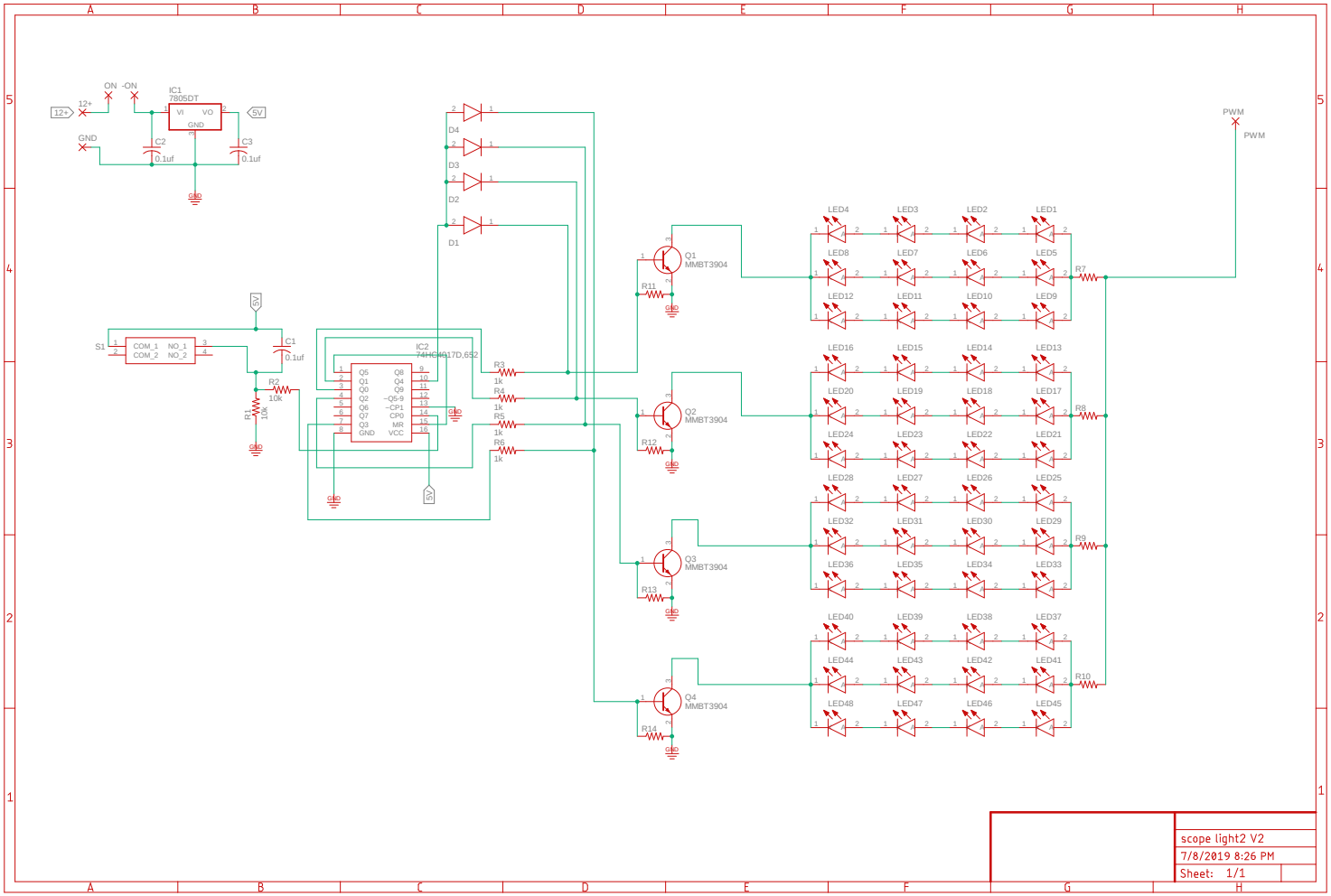

8/13/2019 7:52 PM f=0.50 C:\Users\tburl\Desktop\all light files\scope light2 V2.sch (Sheet: 1/1)