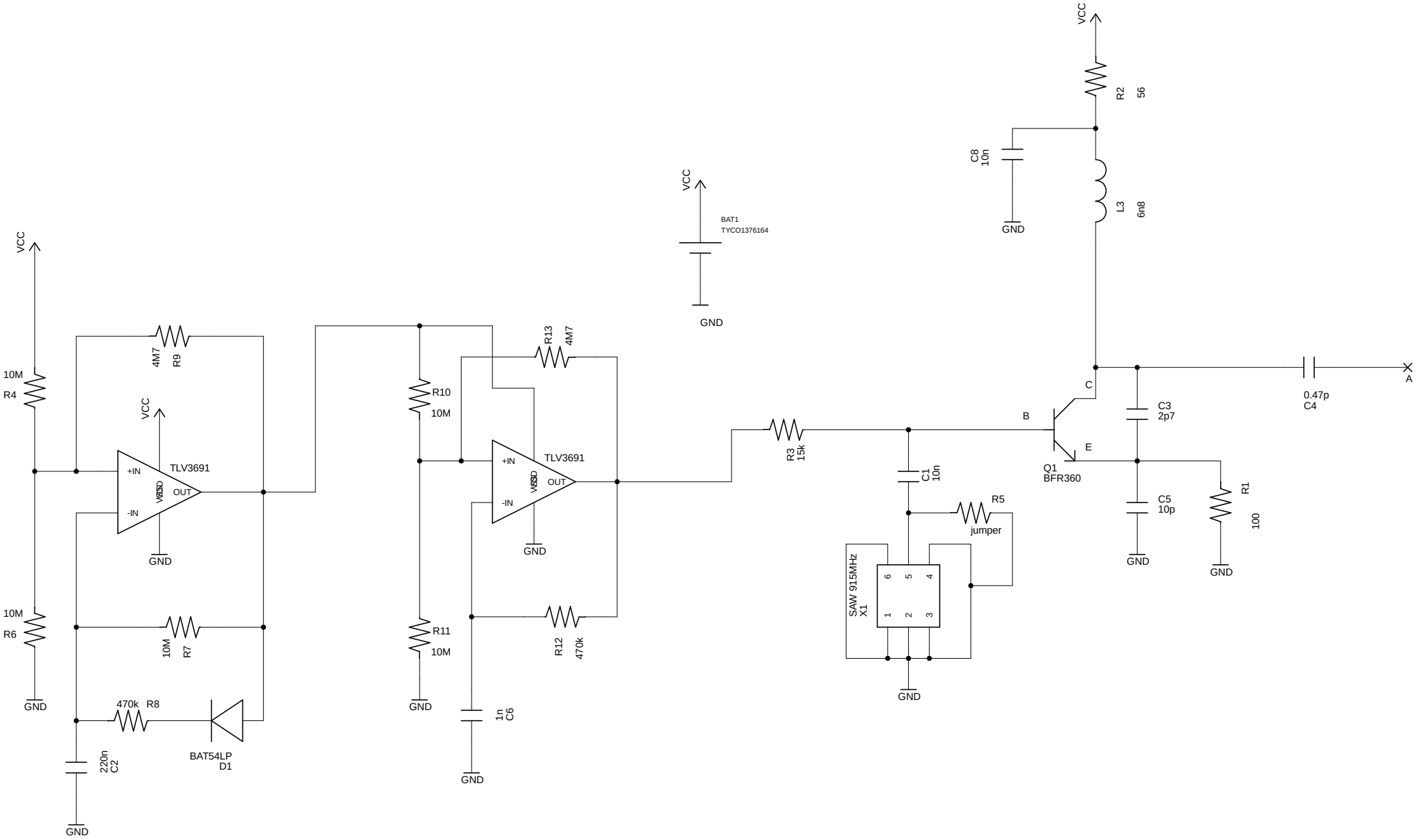
VCC
10M
R4
10M
R6
GND
4M7
R9
VCC
TLV3691
+IN
-IN
OUT
GND
10M
R7
470k
R8
BAT54LP
D1
220n
C2
GND
R10
10M
R11
10M
GND
R13
4M7
TLV3691
+IN
-IN
OUT
GND
R12
470k
1n
C6
GND
VCC
BAT1
TYCO1376164
GND
R3
15k
C1
10n
R5
jumper
SAW 915MHz
X1
1
2
3
4
5
6
GND
VCC
R2
56
C8
10n
GND
L3
6n8
C
B
E
Q1
BFR360
C3
2p7
C5
10p
GND
R1
100
GND
0.47p
C4
A