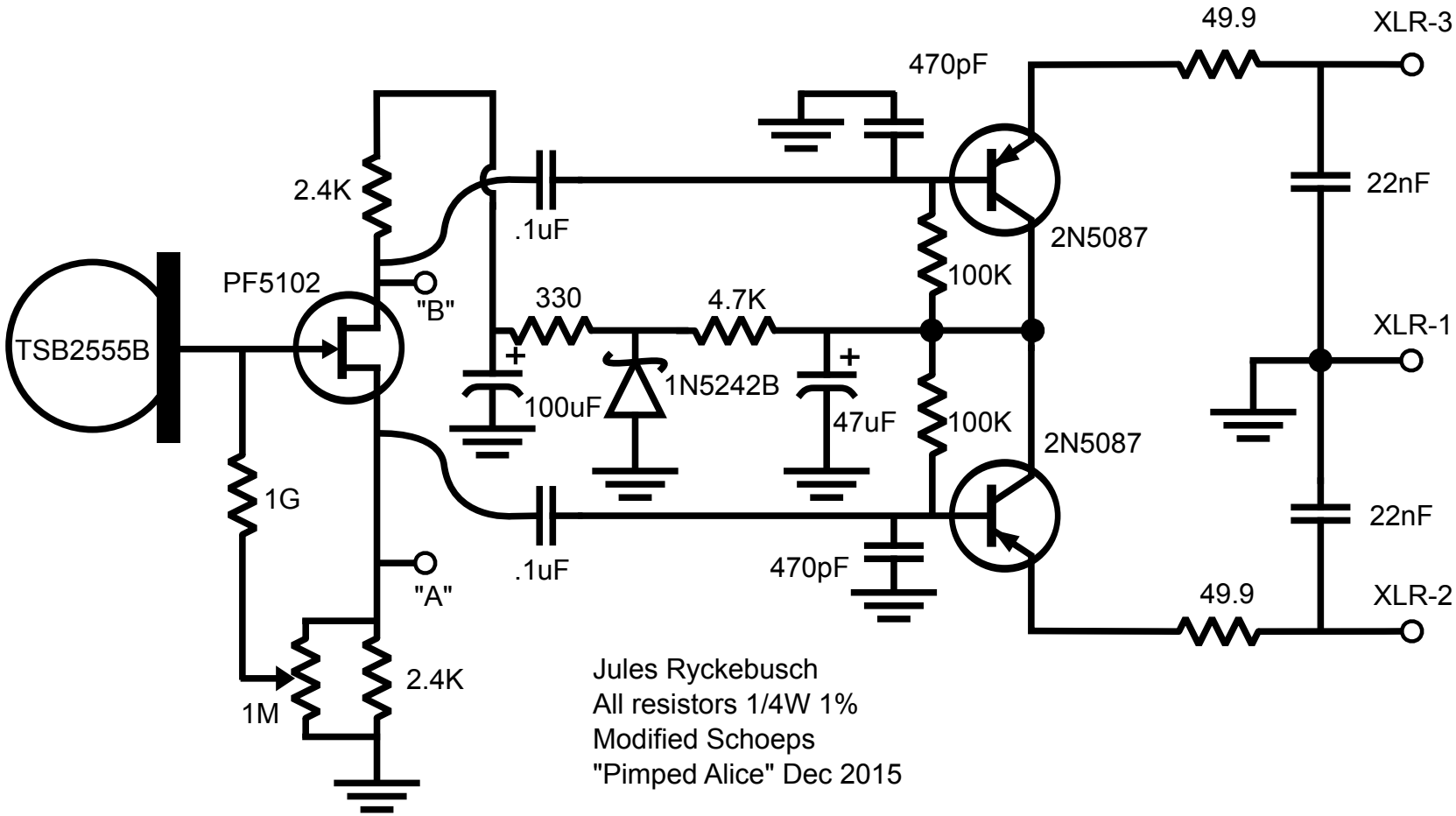
49.9
XLR-3
470pF
2.4K
.1uF
22nF
2N5087
PF5102
"B"
100K
330
4.7K
XLR-1
TSB2555B
100uF
1N5242B
47uF
100K
2N5087
1G
22nF
.1uF
470pF
"A"
49.9
XLR-2
2.4K
1M
Jules Ryckebusch
All resistors 1/4W 1%
Modified Schoeps
"Pimped Alice" Dec 2015