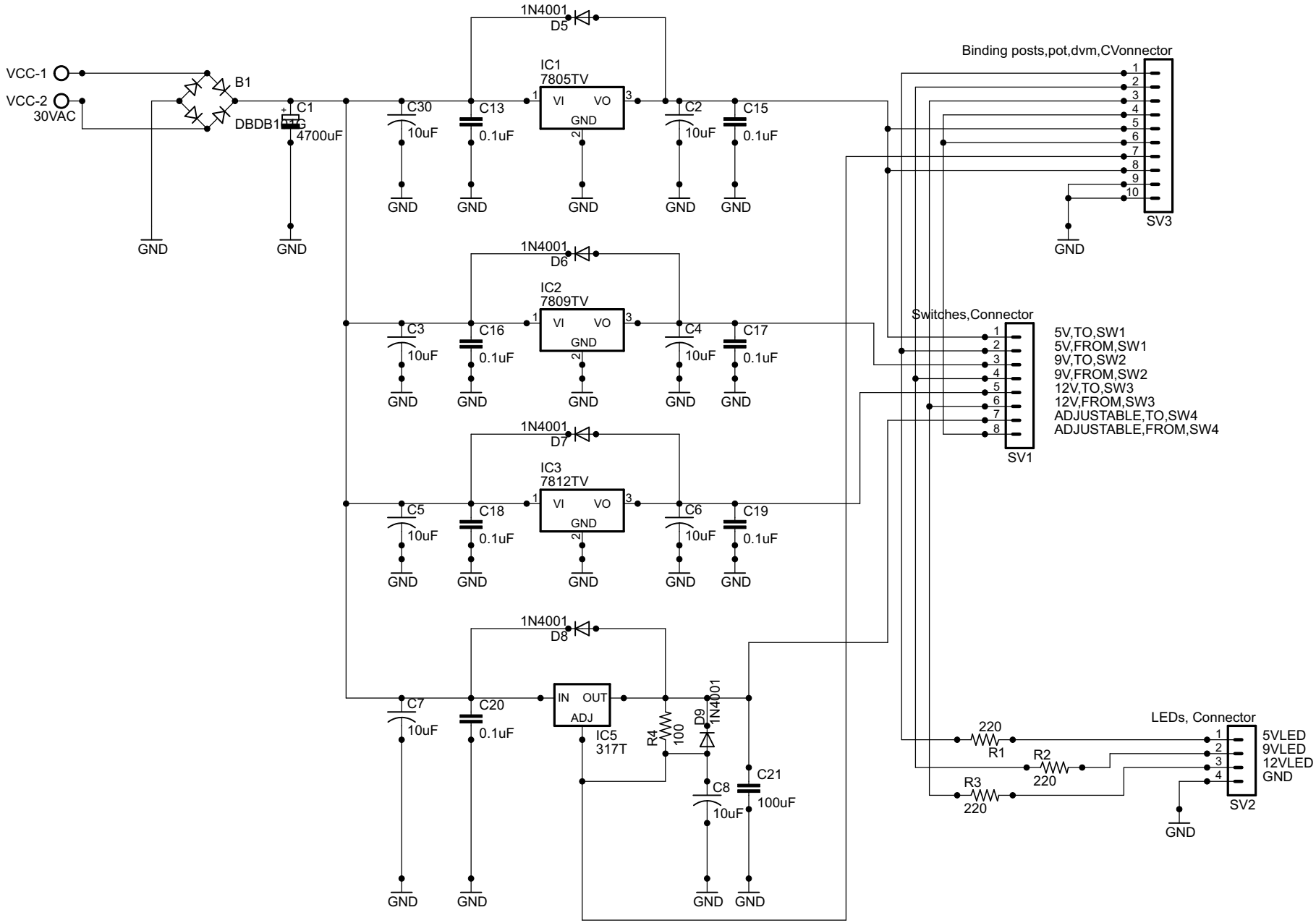
VCC-1
VCC-2
30VAC
B1
DBDB1
C1
4700uF
GND
1N4001
D5
IC1
7805TV
VI
VO
GND
C30
10uF
C13
0.1uF
C2
10uF
C15
0.1uF
1N4001
D6
IC2
7809TV
C3
10uF
C16
0.1uF
C4
10uF
C17
0.1uF
1N4001
D7
IC3
7812TV
C5
10uF
C18
0.1uF
C6
10uF
C19
0.1uF
1N4001
D8
IN
OUT
ADJ
IC5
317T
C7
10uF
C20
0.1uF
R4
100
D9
1N4001
C8
10uF
C21
100uF
Binding posts,pot,dvm,CVonnector
SV3
Switches,Connector
SV1
5V,TO,SW1
5V,FROM,SW1
9V,TO,SW2
9V,FROM,SW2
12V,TO,SW3
12V,FROM,SW3
ADJUSTABLE,TO,SW4
ADJUSTABLE,FROM,SW4
LEDs, Connector
SV2
5VLED
9VLED
12VLED
GND
R1
220
R2
220
R3
220