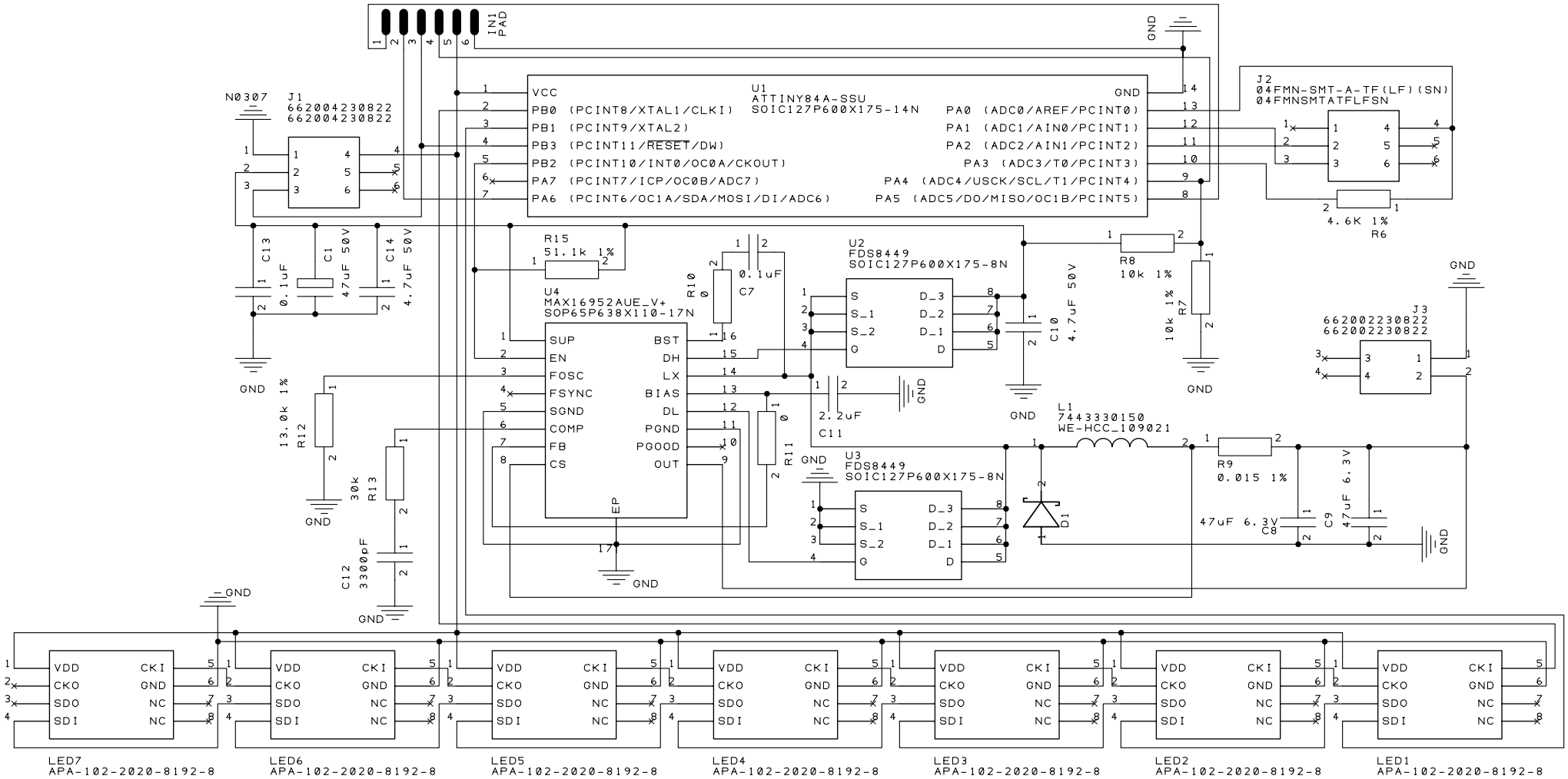
IN1
PAD
GND
N0307
J1
662004230822
662004230822
U1
ATTINY84A-SSU
SOIC127P600X175-14N
VCC
PB0 (PCINT8/XTAL1/CLKI)
PB1 (PCINT9/XTAL2)
PB3 (PCINT11/RESET/DW)
PB2 (PCINT10/INT0/OC0A/CKOUT)
PA7 (PCINT7/ICP/OC0B/ADC7)
PA6 (PCINT6/OC1A/SDA/MOSI/DI/ADC6)
PA0 (ADC0/AREF/PCINT0)
PA1 (ADC1/AIN0/PCINT1)
PA2 (ADC2/AIN1/PCINT2)
PA3 (ADC3/T0/PCINT3)
PA4 (ADC4/USCK/SCL/T1/PCINT4)
PA5 (ADC5/DO/MISO/OC1B/PCINT5)
J2
04FMN-SMT-A-TF(LF)(SN)
04FMNSMTATFLFSN
4.6K 1%
R6
C13
0.1uF
C1
47uF 50V
C14
4.7uF 50V
R15
51.1k 1%
U4
MAX16952AUE_V+
SOP65P638X110-17N
SUP
EN
FOSC
FSYNC
SGND
COMP
FB
CS
BST
DH
LX
BIAS
DL
PGND
PGOOD
OUT
EP
R10
0
C7
0.1uF
U2
FDS8449
SOIC127P600X175-8N
S
S_1
S_2
G
D_3
D_2
D_1
D
R8
10k 1%
R7
10k 1%
C10
4.7uF 50V
J3
662002230822
662002230822
R12
13.0k 1%
R13
30k
C12
3300pF
2.2uF
C11
R11
0
U3
FDS8449
SOIC127P600X175-8N
L1
7443330150
WE-HCC_109021
D1
R9
0.015 1%
47uF 6.3V
C8
C9
47uF 6.3V
VDD
CKO
SDO
SDI
CKI
GND
NC
LED7
APA-102-2020-8192-8
LED6
APA-102-2020-8192-8
LED5
APA-102-2020-8192-8
LED4
APA-102-2020-8192-8
LED3
APA-102-2020-8192-8
LED2
APA-102-2020-8192-8
LED1
APA-102-2020-8192-8