ITEM NO.	DESCRIPTION	QUANTITY
1	Assy_swing_panels	1
2	Side_frame_left	1
3	Side_frame_right	1
4	Front_frame	1
5	Handle	1
6	Threaded_bar_M8x460mm	1
7	Plain Hex Nut - M8	2
8	Plain Washer - M8	6
9	Hinge_bushing	4
10	Hex Socket Flanged Button Head Screw - M8x40	2
11	Hex Socket Head Screw - M6x25	2

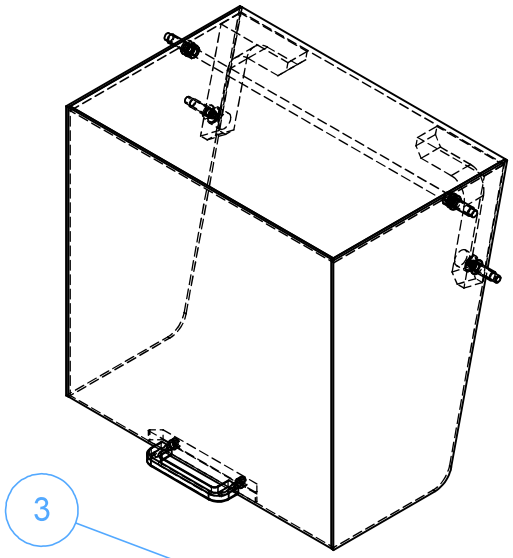

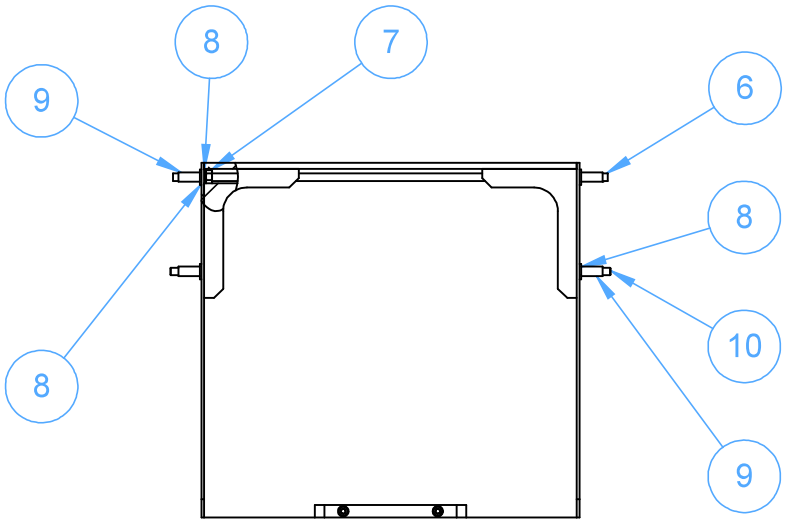

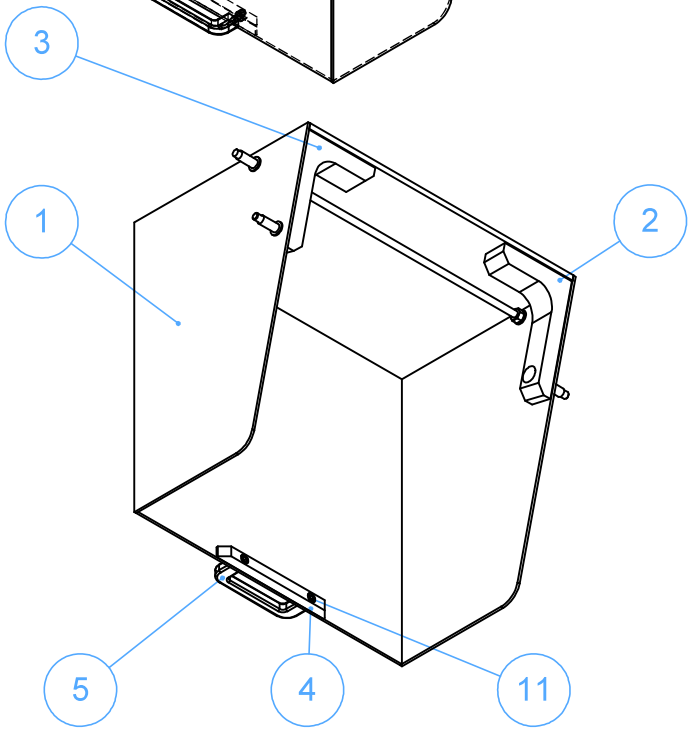

DO NOT SCALE DRAWING	REVISION A	
TITLE: Assy_swing		A4
SCALE:1:8	SHEET 1 OF 1	