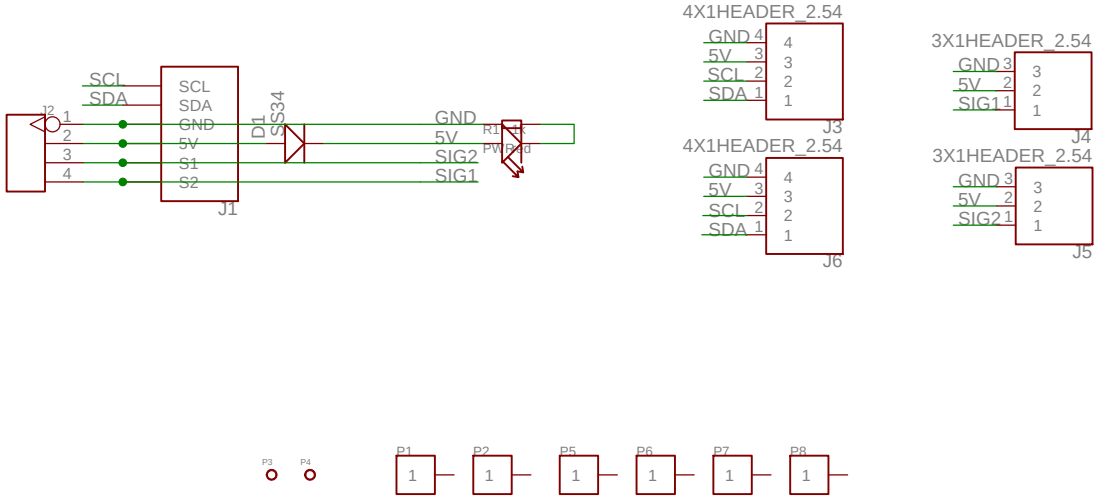

Me-RJ11 Adapter v2.0

www.makeblock.cc

2013/6/3 10:14:32

Sheet: 1/1