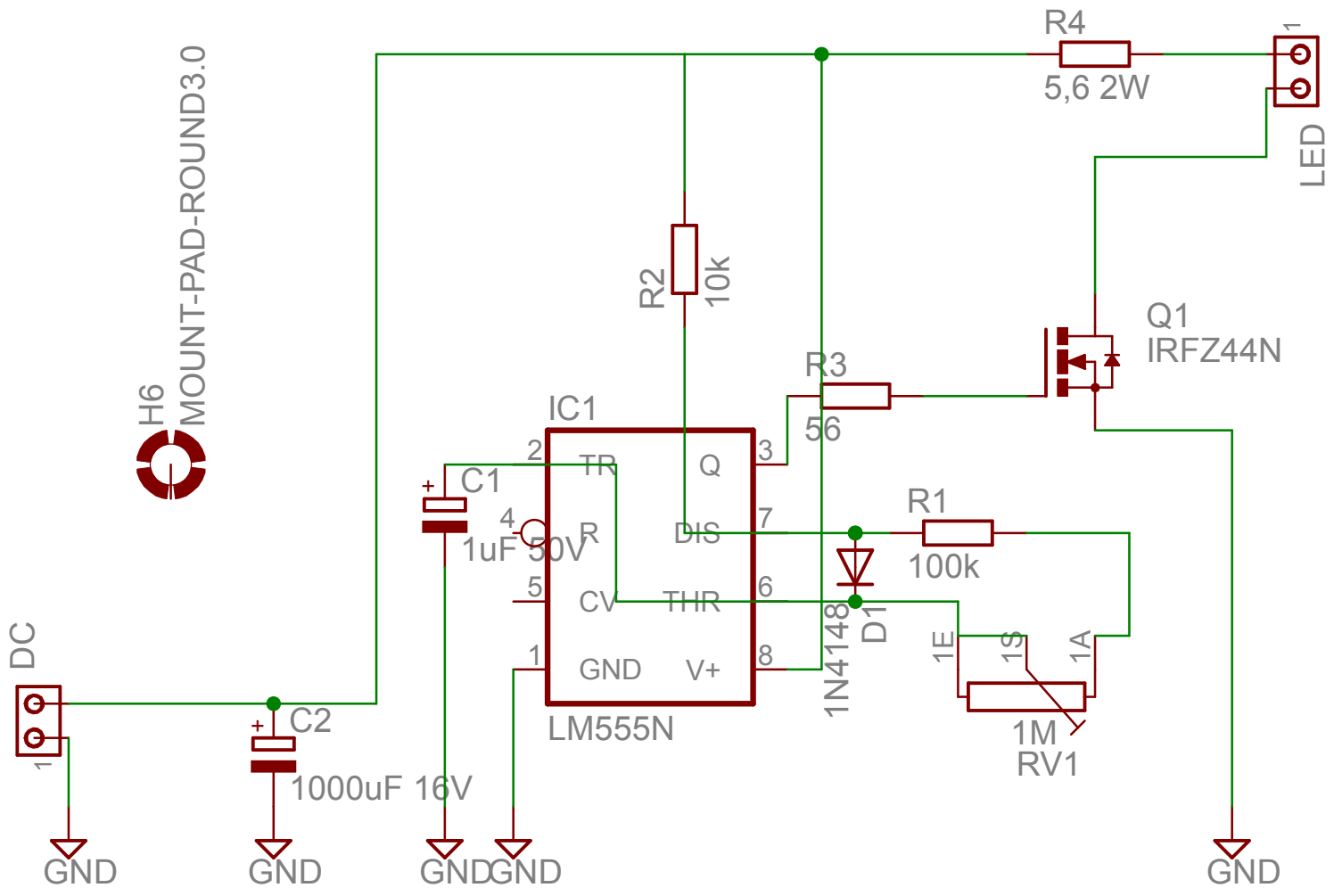

R4
5,6 2W
LED
R2
10k
Q1
IRFZ44N
R3
56
IC1
TR
Q
R
DIS
CV
THR
GND
V+
LM555N
C1
1uF 50V
R1
100k
D1
1N4148
1E
1S
1A
1M
RV1
DC
C2
1000uF 16V
H6
MOUNT-PAD-ROUND3.0
GND
GND
GND
GND
GND