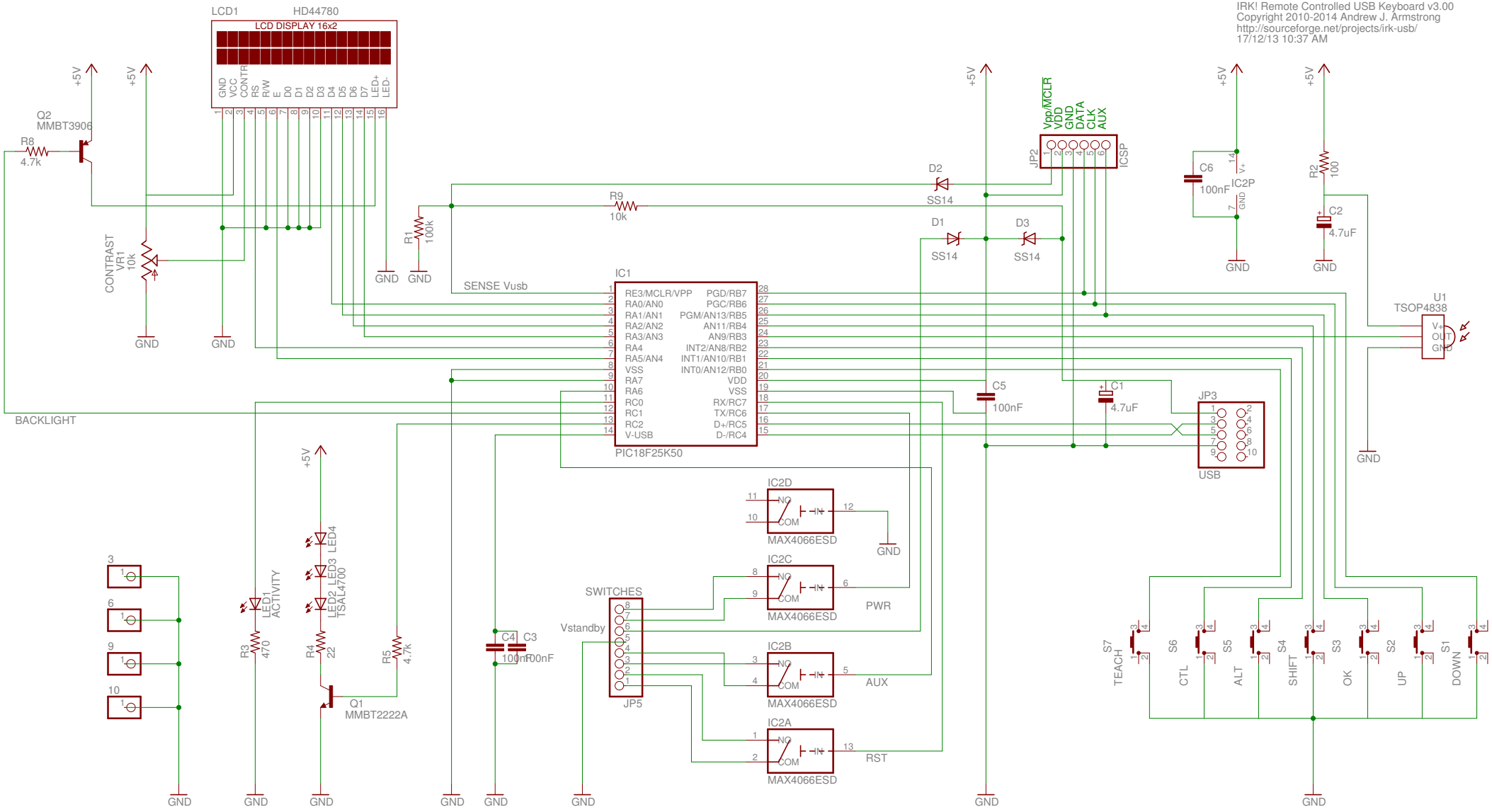
IRK! Remote Controlled USB Keyboard v3.00
Copyright 2010-2014 Andrew J. Armstrong
http://sourceforge.net/projects/irk-usb/
17/12/13 10:37 AM
LCD1
HD44780
LCD DISPLAY 16x2
GND VCC CONTR RS R/W E D0 D1 D2 D3 D4 D5 D6 D7 LED+ LED-
Q2
MMBT3906
R8
4.7k
CONTRAST
VR1
10k
R1
100k
R9
10k
D2
SS14
D1
SS14
D3
SS14
JP2
ICSP
Vpp/MCLR
VDD
GND
DATA
CLK
AUX
C6
100nF
IC2P
R2
100
C2
4.7uF
SENSE Vusb
IC1
RE3/MCLR/VPP
RA0/AN0
RA1/AN1
RA2/AN2
RA3/AN3
RA4
RA5/AN4
VSS
RA7
RA6
RC0
RC1
RC2
V-USB
PGD/RB7
PGC/RB6
PGM/AN13/RB5
AN11/RB4
AN9/RB3
INT2/AN8/RB2
INT1/AN10/RB1
INT0/AN12/RB0
VDD
VSS
RX/RC7
TX/RC6
D+/RC5
D-/RC4
PIC18F25K50
U1
TSOP4838
V+
OUT
GND
C5
100nF
C1
4.7uF
JP3
USB
BACKLIGHT
IC2D
MAX4066ESD
IC2C
MAX4066ESD
PWR
IC2B
MAX4066ESD
AUX
IC2A
MAX4066ESD
RST
SWITCHES
JP5
Vstandby
C4
100nF
C3
100nF
LED1
ACTIVITY
LED2
LED3
LED4
TSAL4700
R3
470
R4
22
R5
4.7k
Q1
MMBT2222A
S7
TEACH
S6
CTL
S5
ALT
S4
SHIFT
S3
OK
S2
UP
S1
DOWN
+5V
GND