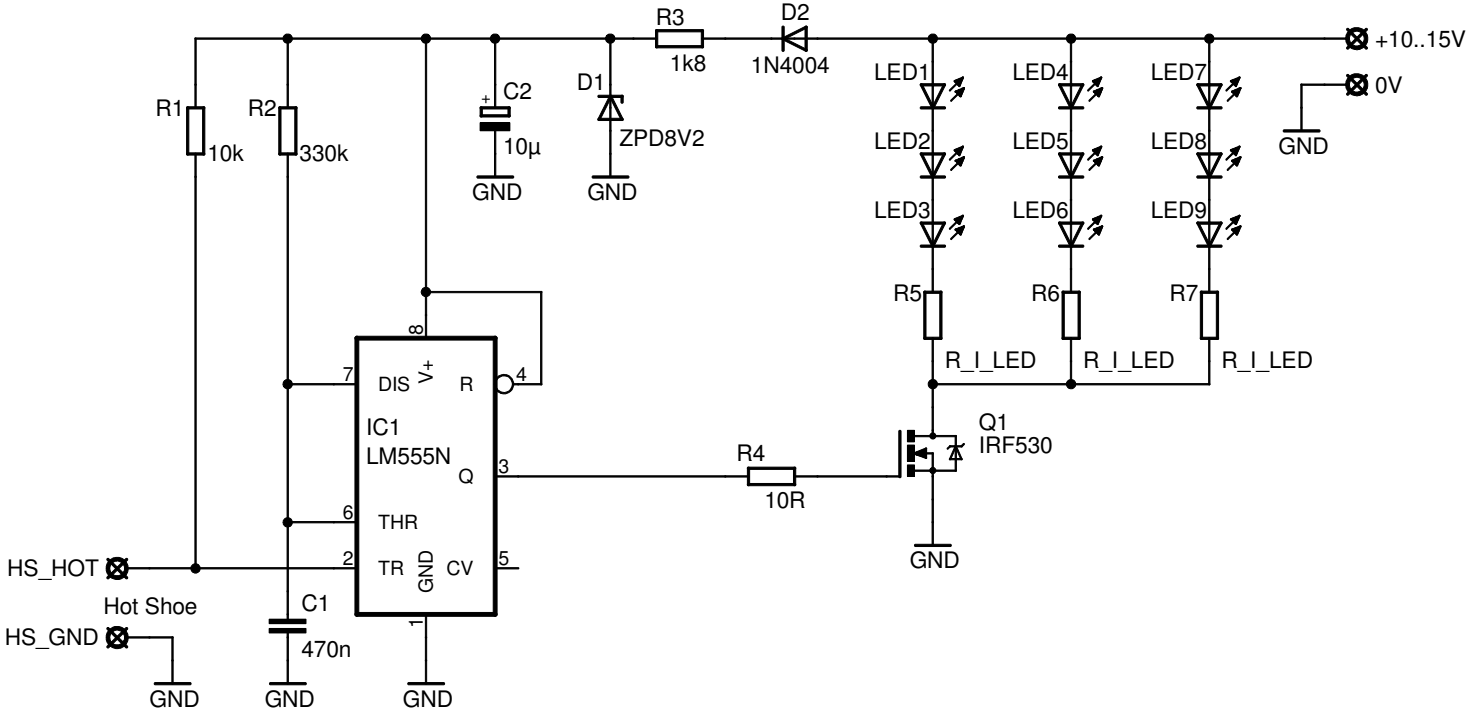
R3
1k8
D2
1N4004
+10..15V
0V
GND
R1
10k
R2
330k
C2
10µ
D1
ZPD8V2
GND
GND
LED1
LED2
LED3
LED4
LED5
LED6
LED7
LED8
LED9
R5
R6
R7
R_I_LED
R_I_LED
R_I_LED
8
7
DIS
V+
R
4
IC1
LM555N
Q
3
6
THR
2
TR
GND
CV
5
1
R4
10R
Q1
IRF530
GND
HS_HOT
Hot Shoe
HS_GND
C1
470n
GND
GND
GND

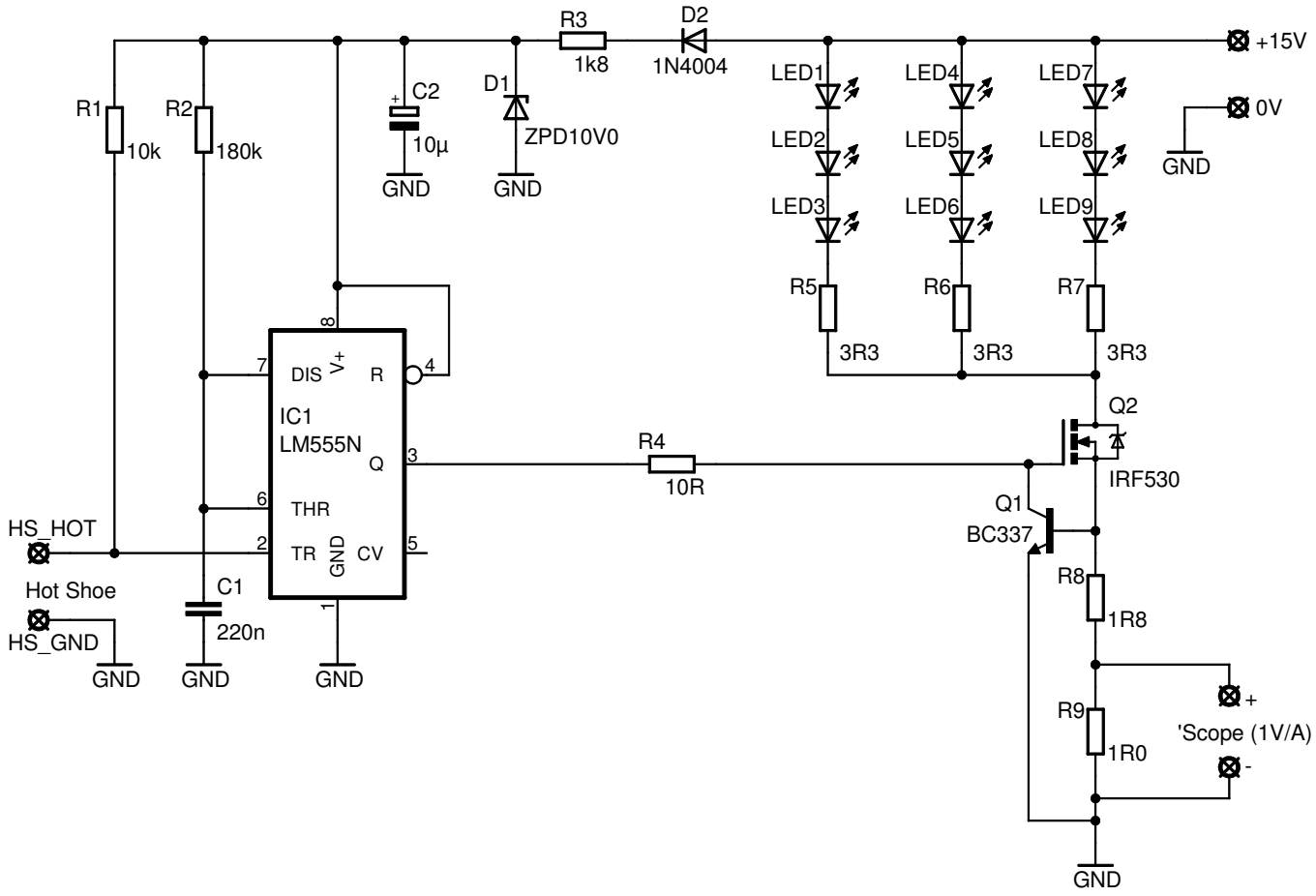
R3
1k8
D2
1N4004
+15V
0V
GND
R1
10k
R2
180k
C2
10µ
GND
D1
ZPD10V0
GND
LED1
LED2
LED3
LED4
LED5
LED6
LED7
LED8
LED9
R5
R6
R7
3R3
3R3
3R3
Q2
IRF530
IC1
LM555N
DIS
V+
R
Q
THR
TR
GND
CV
R4
10R
Q1
BC337
HS_HOT
Hot Shoe
HS_GND
C1
220n
GND
GND
GND
R8
1R8
R9
1R0
+
'Scope (1V/A)
-
GND