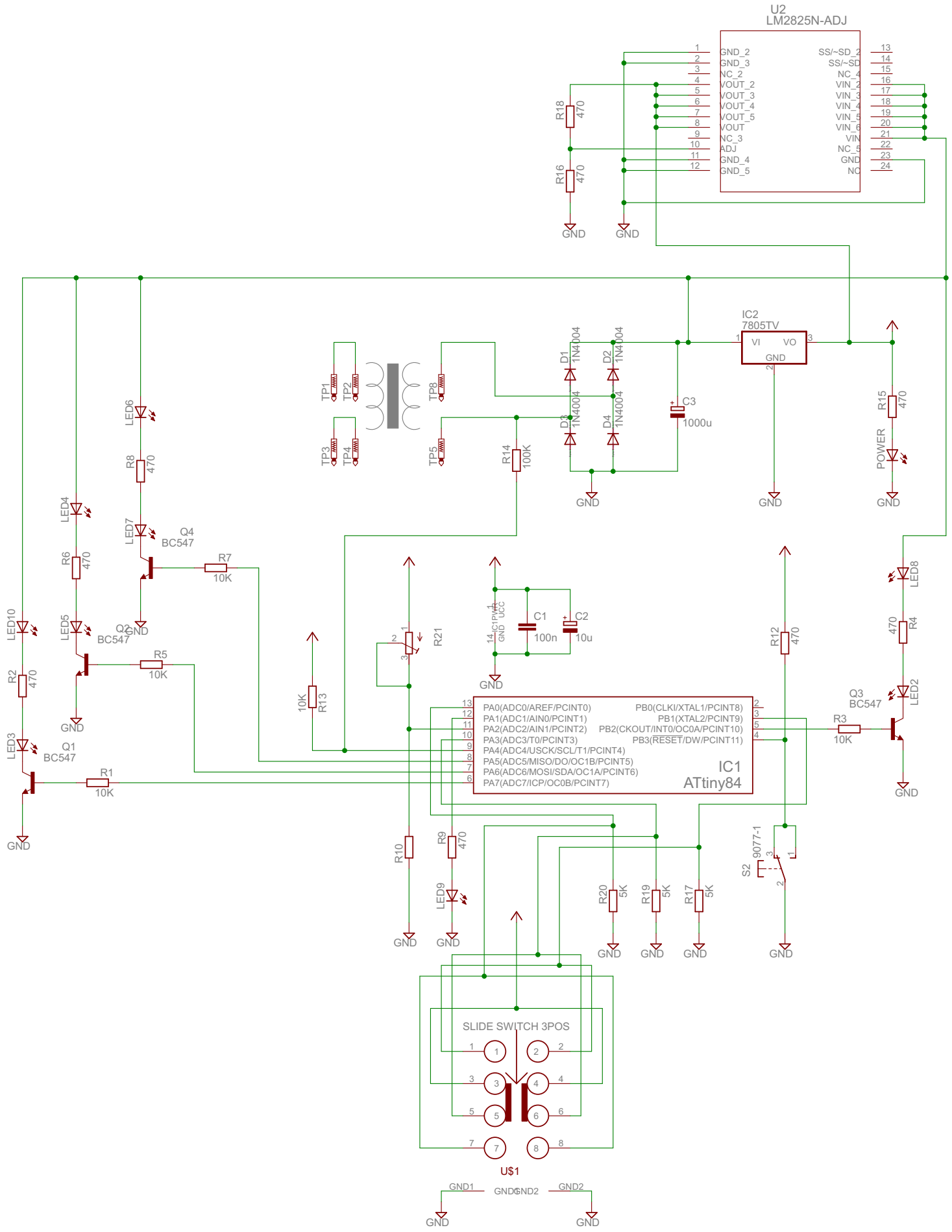
U2
LM2825N-ADJ
GND_2
GND_3
NC_2
VOUT_2
VOUT_3
VOUT_4
VOUT_5
VOUT
NC_3
ADJ
GND_4
GND_5
SS/~SD_2
SS/~SD
NC_4
VIN_2
VIN_3
VIN_4
VIN_5
VIN_6
VIN
NC_5
GND
NC
R18 470
R16 470
IC2
7805TV
VI
VO
GND
C3
1000u
D1 1N4004
D2 1N4004
D3 1N4004
D4 1N4004
TP1
TP2
TP3
TP4
TP5
TP8
R14 100K
R15 470
POWER
LED6
R8 470
LED7
Q4
BC547
R7
10K
LED4
R6 470
LED5
Q2
BC547
R5
10K
LED10
R2 470
LED3
Q1
BC547
R1
10K
10K
R13
R21
C1
100n
C2
10u
R12 470
LED8
470
R4
LED2
Q3
BC547
R3
10K
PA0(ADC0/AREF/PCINT0)
PA1(ADC1/AIN0/PCINT1)
PA2(ADC2/AIN1/PCINT2)
PA3(ADC3/T0/PCINT3)
PA4(ADC4/USCK/SCL/T1/PCINT4)
PA5(ADC5/MISO/DO/OC1B/PCINT5)
PA6(ADC6/MOSI/SDA/OC1A/PCINT6)
PA7(ADC7/ICP/OC0B/PCINT7)
PB0(CLKI/XTAL1/PCINT8)
PB1(XTAL2/PCINT9)
PB2(CKOUT/INT0/OC0A/PCINT10)
PB3(RESET/DW/PCINT11)
IC1
ATtiny84
R10
R9 470
LED9
R20 5K
R19 5K
R17 5K
S2
9077-1
SLIDE SWITCH 3POS
U$1
GND1
GND2
GND