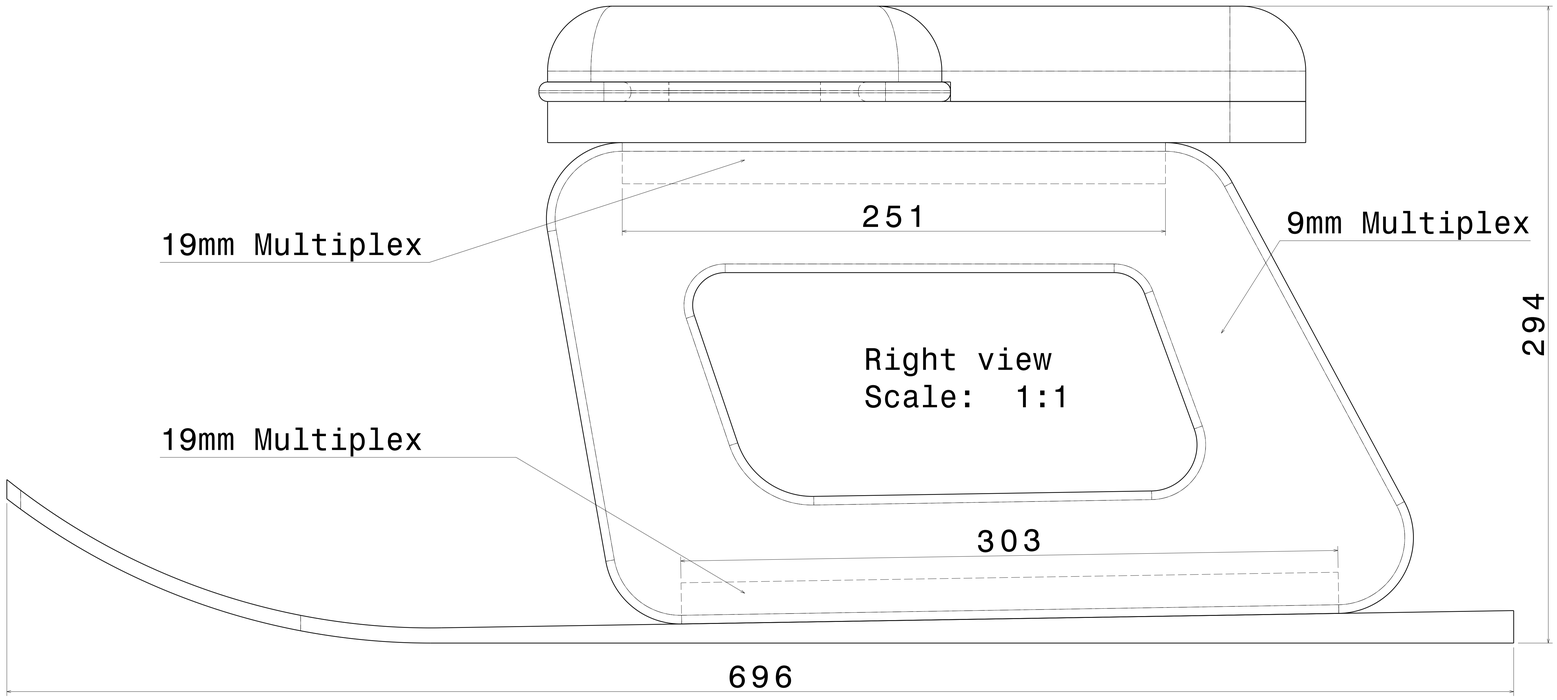
19mm Multiplex
251
9mm Multiplex
294
Right view
Scale: 1:1
19mm Multiplex
303
696

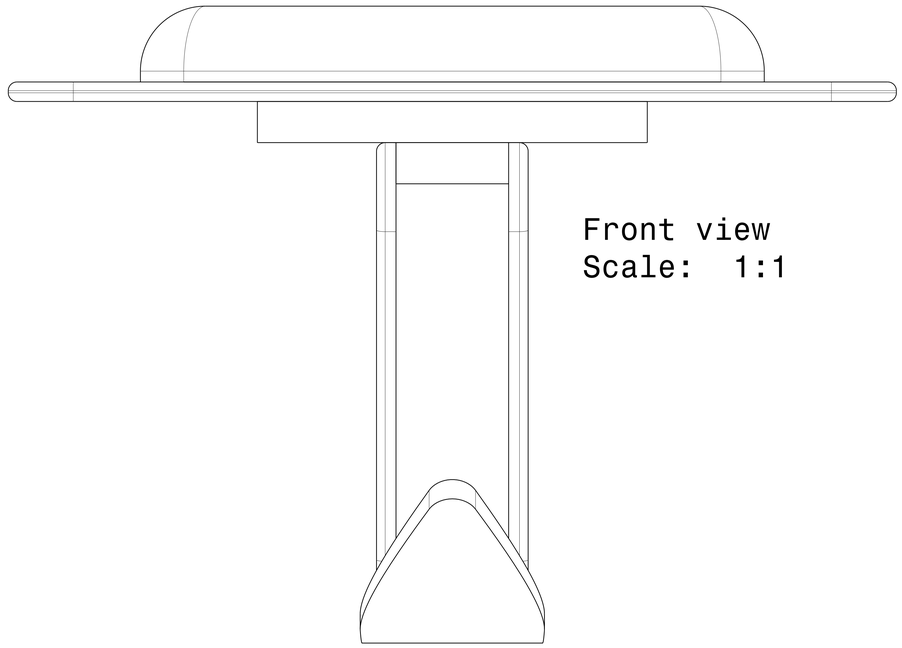
Front view
Scale: 1:1

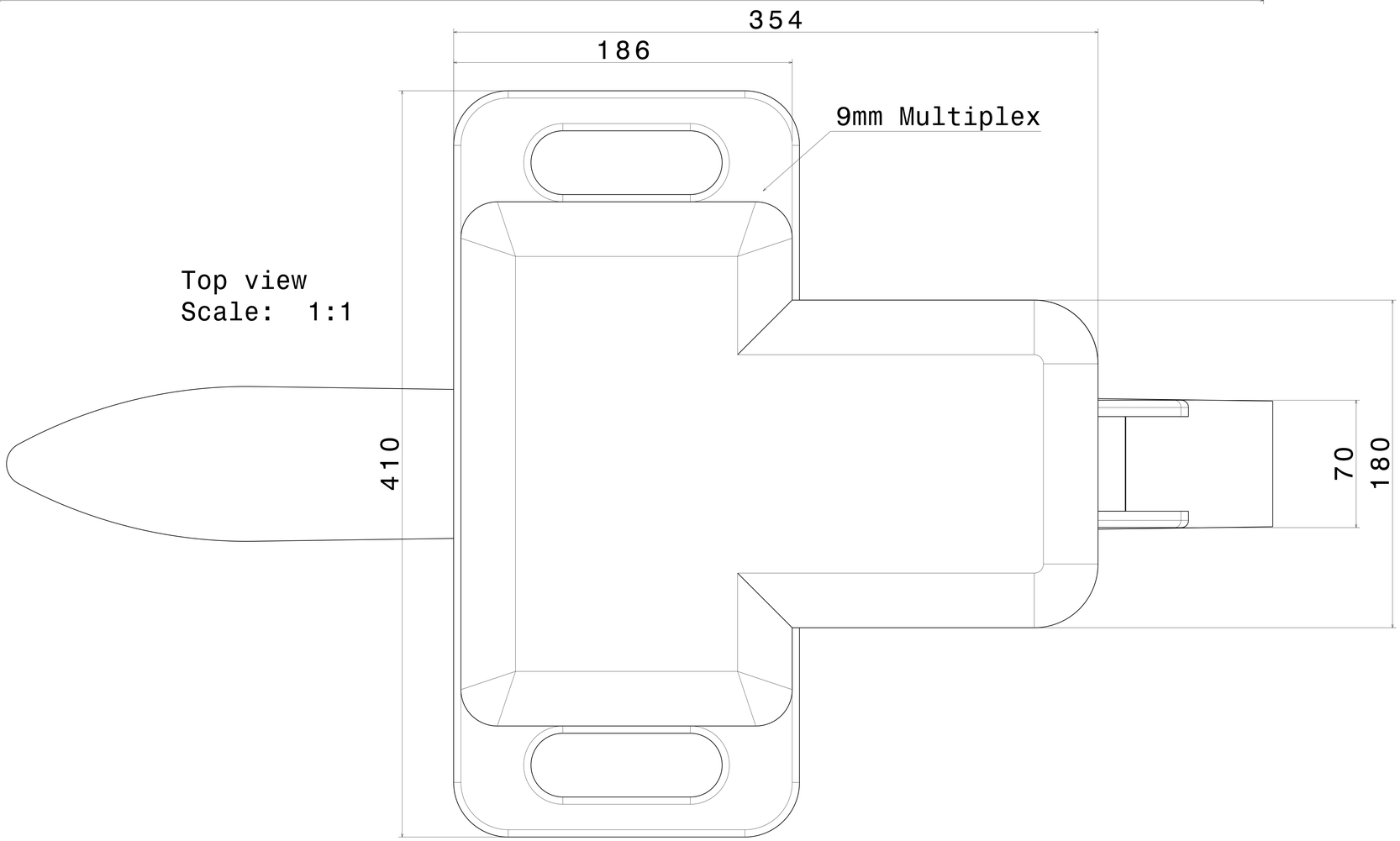
354
186
9mm Multiplex
Top view
Scale: 1:1
410
70
180

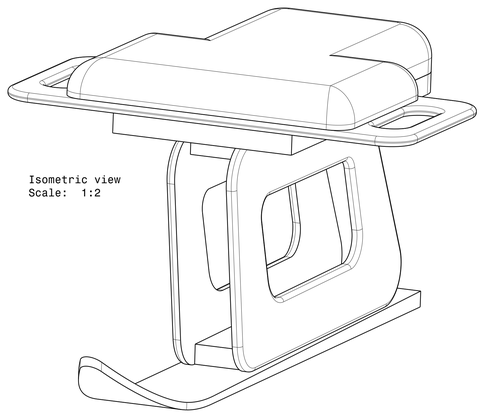
Isometric view
Scale: 1:2