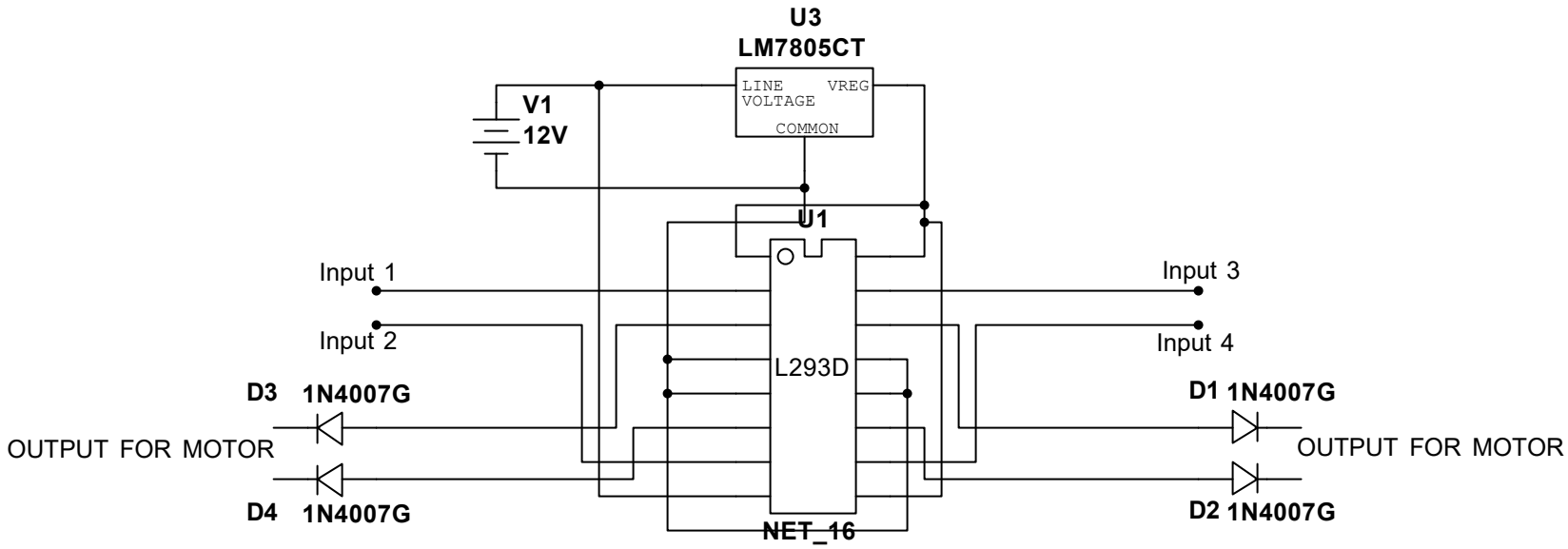
U3
LM7805CT
LINE VOLTAGE
VREG
COMMON
V1
12V
U1
L293D
Input 1
Input 2
Input 3
Input 4
D3 1N4007G
D4 1N4007G
D1 1N4007G
D2 1N4007G
OUTPUT FOR MOTOR
OUTPUT FOR MOTOR
NET_16