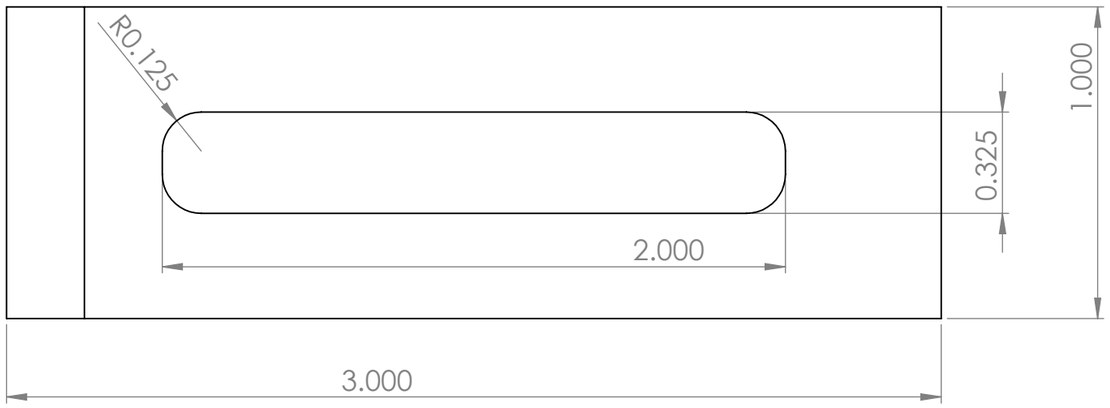

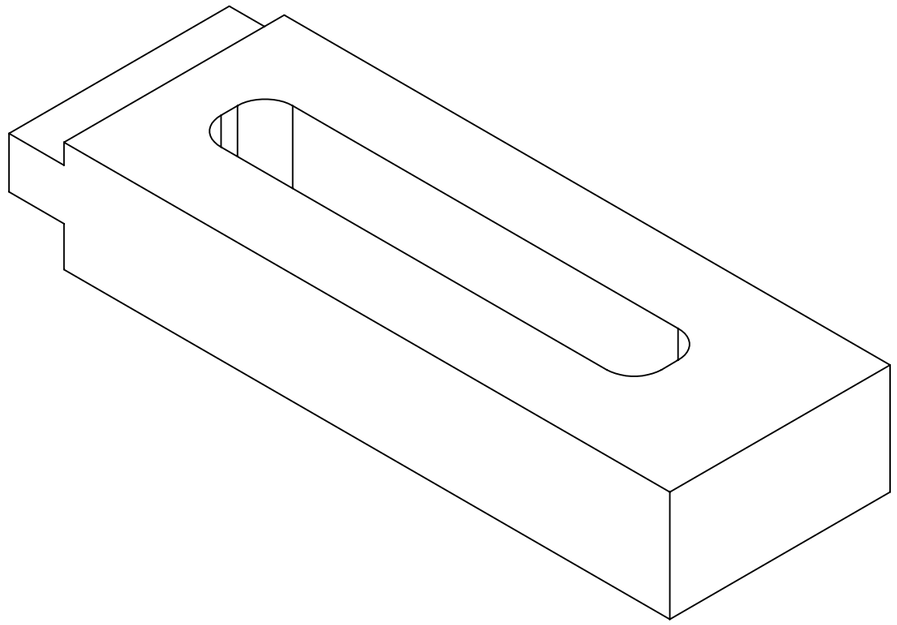

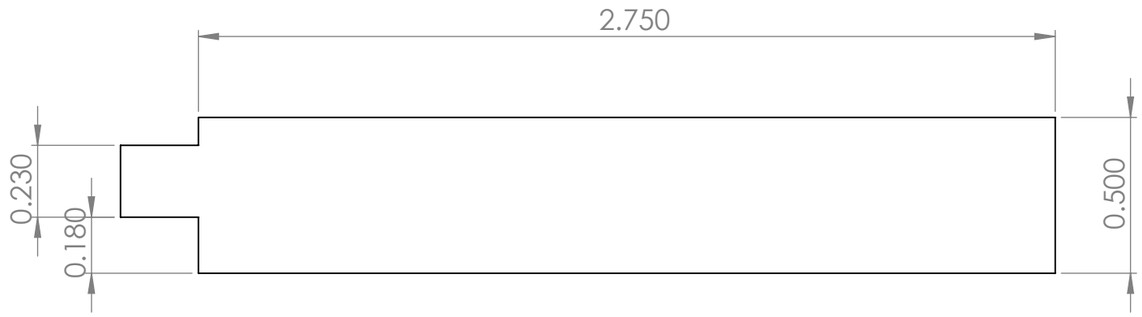

UNLESS OTHERWISE SPECIFIED: DIMENSIONS ARE IN Inches SURFACE FINISH: TOLERANCES: LINEAR: ANGULAR:	FINISH:				DEBUR AND BREAK SHARP EDGES	DO NOT SCALE DRAWING / REVISION
						Penguin Manufacturing
	NAME	SIGNATURE	DATE			TITLE:
DRAWN						CNC Hold Down
CHK'D						
APPV'D						
MFG						
Q.A				MATERIAL: HDPE plastic		DWG NO. tslot hold down / A3
				WEIGHT:		SCALE:2:1 / SHEET 1 OF 1