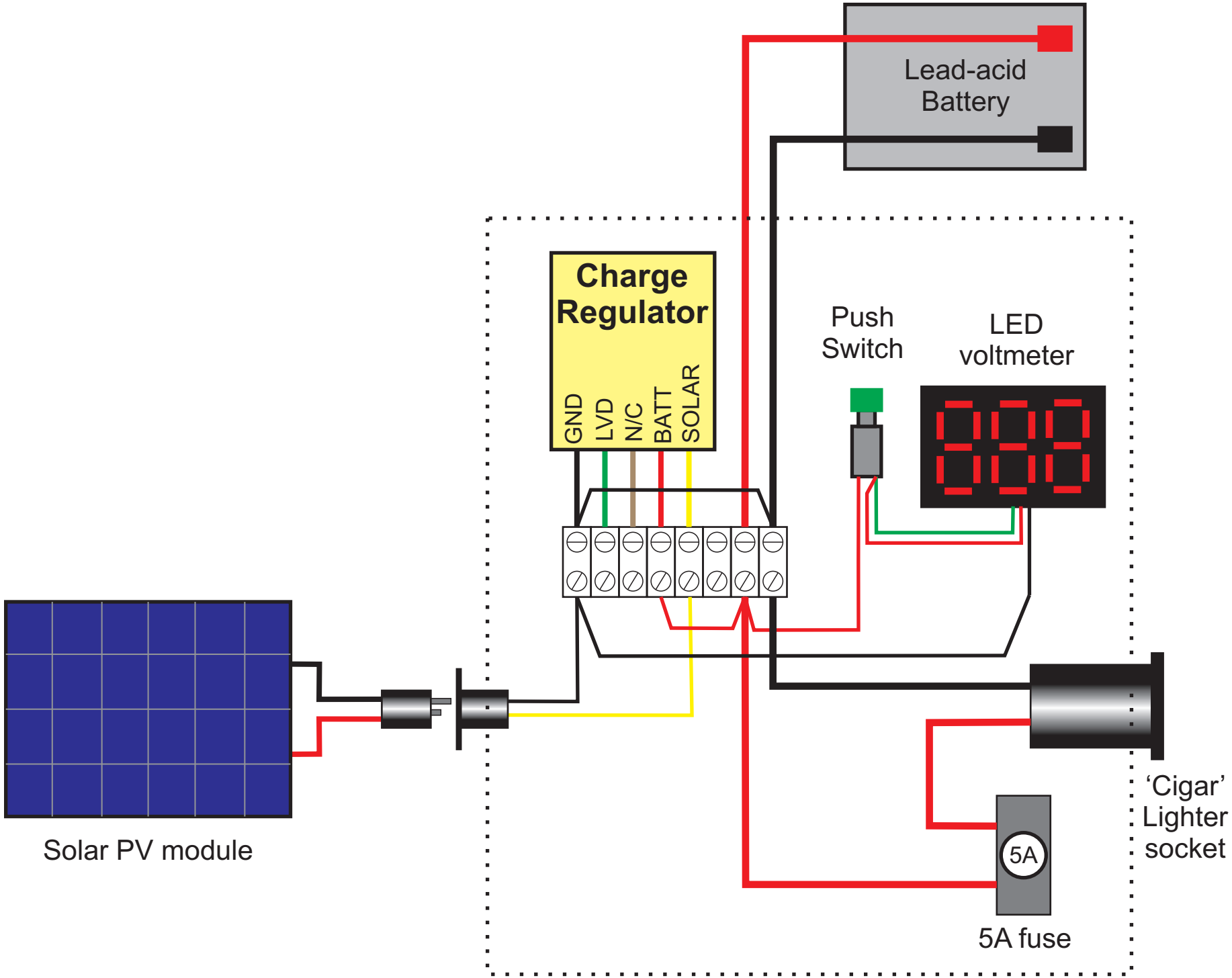
Lead-acid
Battery
Charge
Regulator
GND
LVD
N/C
BATT
SOLAR
Push
Switch
LED
voltmeter
Solar PV module
'Cigar'
Lighter
socket
5A
5A fuse