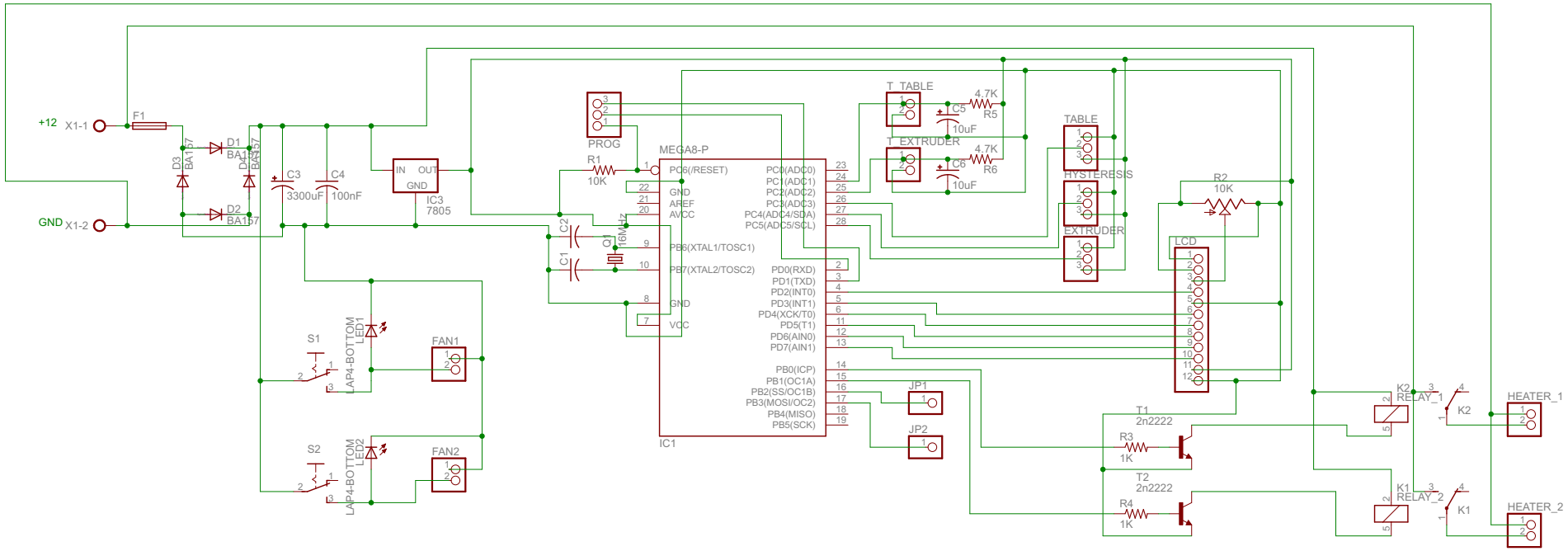
+12
X1-1
GND
X1-2
F1
D1
BA157
D2
BA157
D3
BA157
D4
BA157
C3
3300uF
C4
100nF
IN
OUT
GND
IC3
7805
PROG
R1
10K
MEGA8-P
PC6(/RESET)
GND
AREF
AVCC
PB6(XTAL1/TOSC1)
PB7(XTAL2/TOSC2)
GND
VCC
PC0(ADC0)
PC1(ADC1)
PC2(ADC2)
PC3(ADC3)
PC4(ADC4/SDA)
PC5(ADC5/SCL)
PD0(RXD)
PD1(TXD)
PD2(INT0)
PD3(INT1)
PD4(XCK/T0)
PD5(T1)
PD6(AIN0)
PD7(AIN1)
PB0(ICP)
PB1(OC1A)
PB2(SS/OC1B)
PB3(MOSI/OC2)
PB4(MISO)
PB5(SCK)
IC1
C2
C1
Q1
16MHz
T_TABLE
C5
10uF
4.7K
R5
T_EXTRUDER
C6
10uF
4.7K
R6
TABLE
HYSTERESIS
EXTRUDER
R2
10K
LCD
S1
LAP4-BOTTOM
LED1
FAN1
S2
LAP4-BOTTOM
LED2
FAN2
JP1
JP2
T1
2n2222
R3
1K
T2
2n2222
R4
1K
K2
RELAY_1
K2
HEATER_1
K1
RELAY_2
K1
HEATER_2