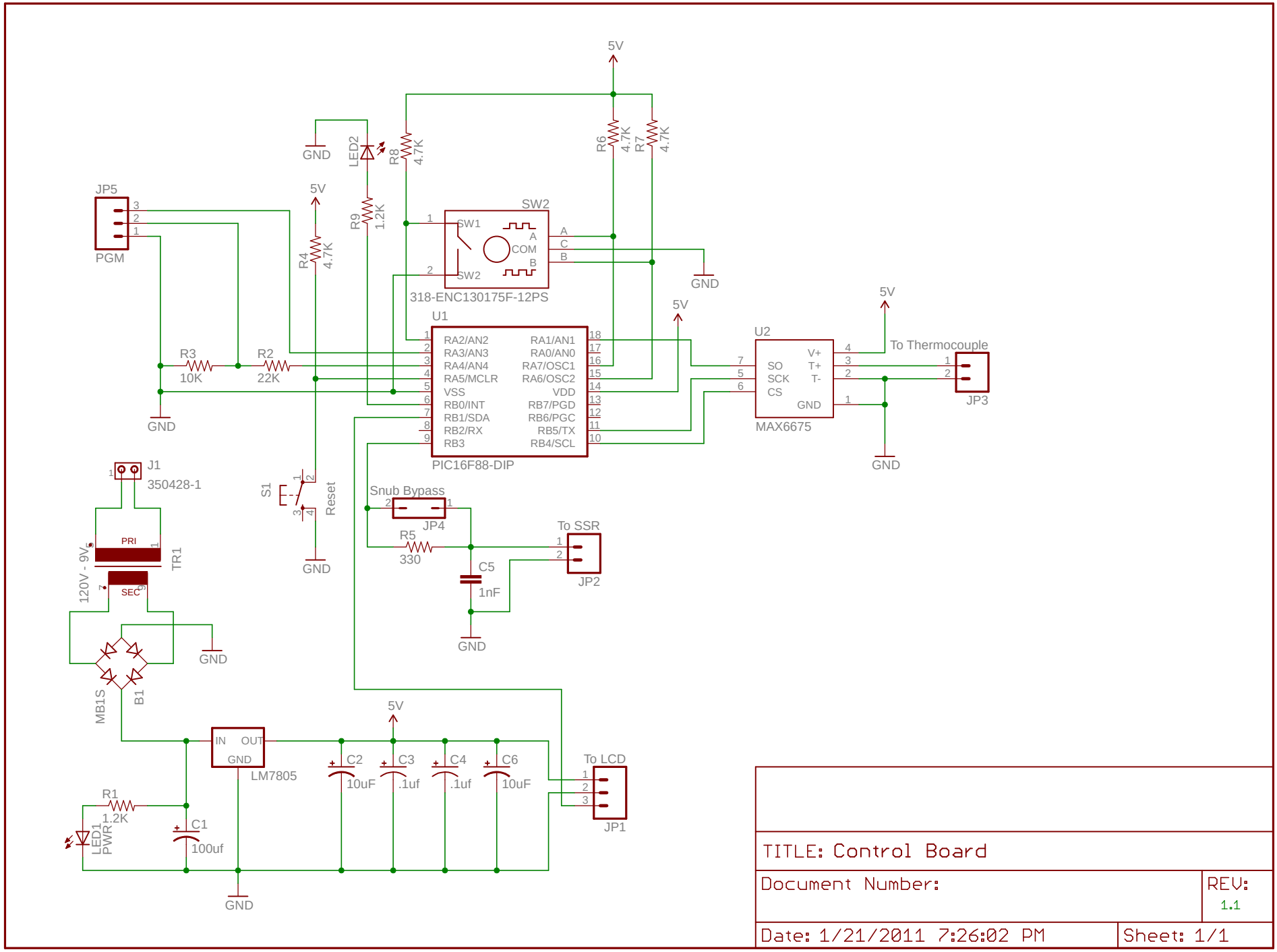

TITLE: Control Board

Document Number:

REV: 1.1

Date: 1/21/2011 7:26:02 PM

Sheet: 1/1