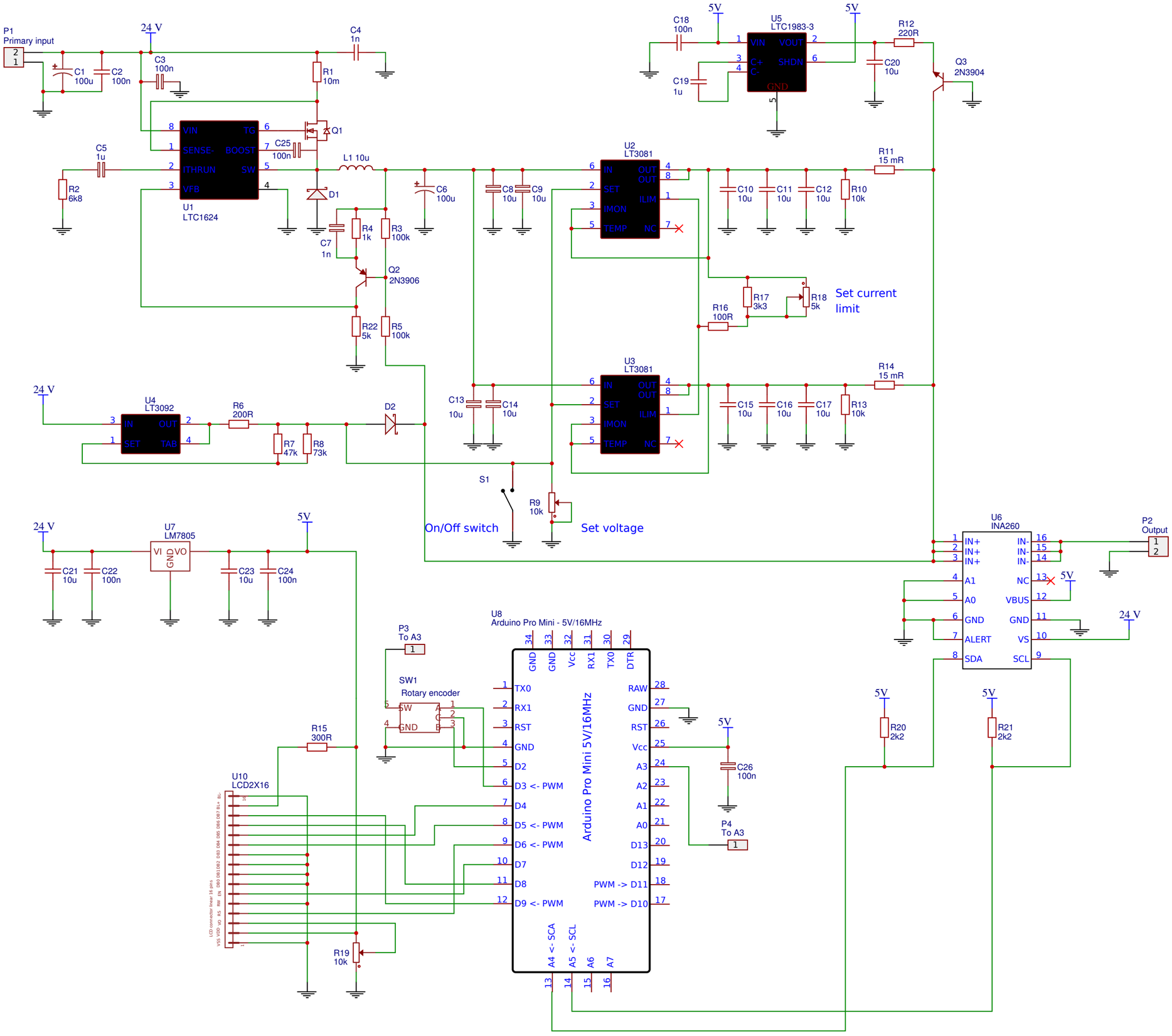
P1
Primary input
24 V
C1
100u
C2
100n
C3
100n
C4
1n
R1
10m
Q1
C25
100n
L1 10u
D1
C5
1u
R2
6k8
U1
LTC1624
VIN
SENSE-
ITHRUN
VFB
TG
BOOST
SW
C6
100u
C7
1n
R4
1k
R3
100k
Q2
2N3906
R22
5k
R5
100k
C8
10u
C9
10u
U2
LT3081
IN
SET
IMON
TEMP
OUT
ILIM
NC
C10
10u
C11
10u
C12
10u
R10
10k
R11
15 mR
R16
100R
R17
3k3
R18
5k
Set current limit
U3
LT3081
C13
10u
C14
10u
C15
10u
C16
10u
C17
10u
R13
10k
R14
15 mR
U4
LT3092
R6
200R
R7
47k
R8
73k
D2
S1
On/Off switch
R9
10k
Set voltage
U5
LTC1983-3
C18
100n
C19
1u
VIN
VOUT
C+
C-
SHDN
GND
5V
R12
220R
C20
10u
Q3
2N3904
U7
LM7805
VI
VO
GND
C21
10u
C22
100n
C23
10u
C24
100n
U6
INA260
IN+
IN-
A1
A0
GND
ALERT
SDA
NC
VBUS
VS
SCL
P2
Output
R20
2k2
R21
2k2
U8
Arduino Pro Mini - 5V/16MHz
Arduino Pro Mini 5V/16MHz
TX0
RX1
RST
D2
D3 <- PWM
D4
D5 <- PWM
D6 <- PWM
D7
D8
D9 <- PWM
RAW
A3
A2
A1
A0
D13
D12
PWM -> D11
PWM -> D10
A4 <- SCA
A5 <- SCL
A6
A7
DTR
P3
To A3
SW1
Rotary encoder
C26
100n
P4
To A3
R15
300R
U10
LCD2X16
R19
10k