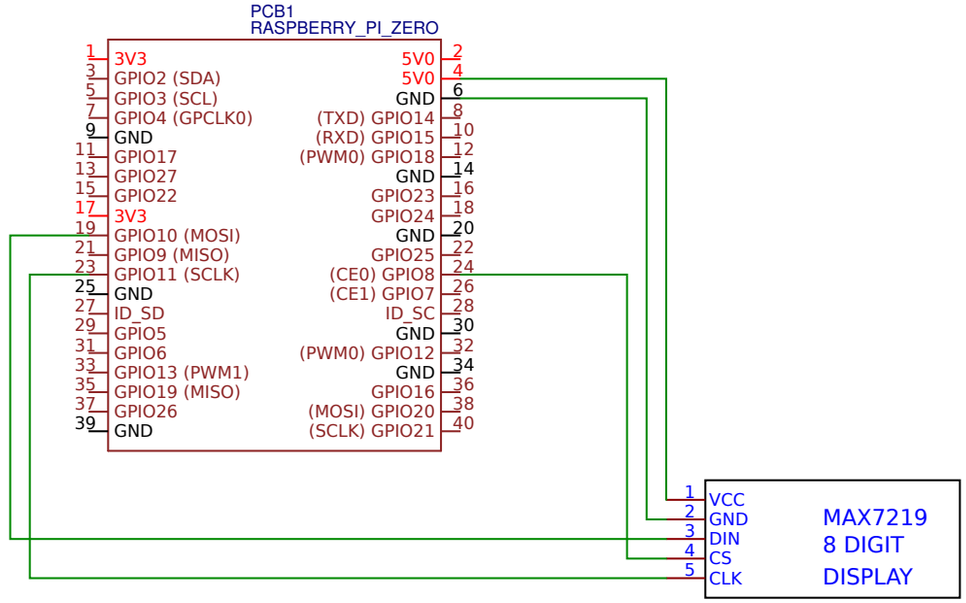

TITLE: PiMVG with 8d7s display	REV: 1.0
Date: 2017-10-26	Sheet: 1/1
EasyEDA V4.10.3	Drawn By: nachomartinochoa